Service Schematics

NOKIA 5330 Mobile TV Edition

RM-615

IMPORTANT

This document is intended for use by authorized Nokia service centers only. Please use the document together with other documents such as the Service Manual and Service Bulletins.

Version information

While every effort has been made to ensure that the document is accurate, some errors may exist. Please always check for the latest published version for this document.

If you find any errors in the document please send email to: TrainingAndVendorDevelopment@nokia.com

Version history

1.0 First Approved version.

Table of Contents

Front page	1
RAPS, HS USB, Sensors, User Interface	2
GAZOO, Audio, MMC, SIM, Battery	3
Keyboard	4
BTHFM, DVB	5
RF part	6
Component Finder Top	7
Component Finder Bottom	8

Copyright © Nokia

This material,including documentation and any related computer programs is protected by copyright, controlled by Nokia. All rights are reserved. Copying, including reproducing, modifying, storing, adapting or translating any or all of this material requires the prior written consent of Nokia. This material also contains company confidential information, which may not be disclosed to others without the prior written consent of Nokia.

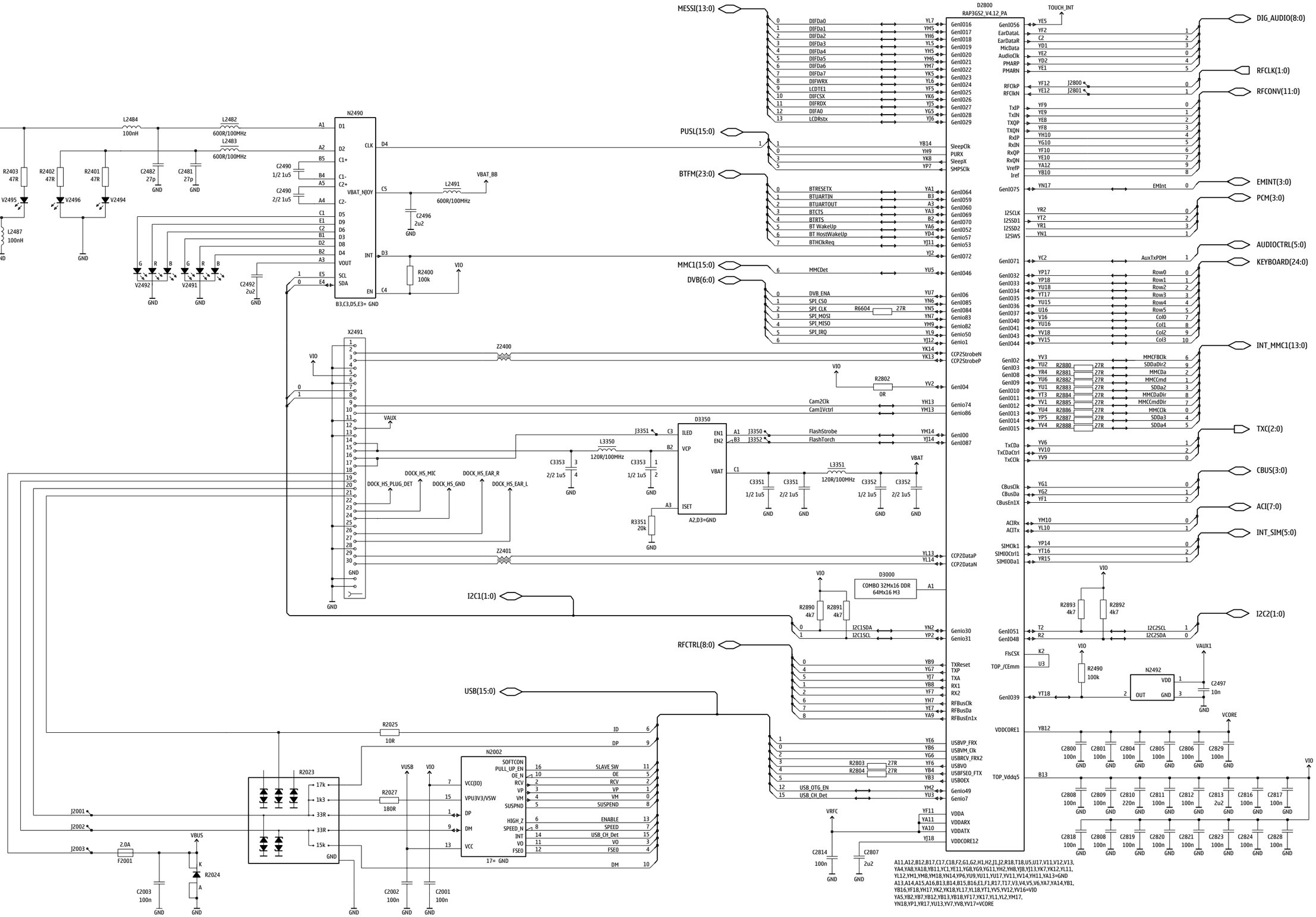
MESSI(13:0)
PUSL(15:0)
BTFM(23:0)
MMC1(15:0)
DVB(6:0)
I2C1(1:0)
RFCTRL(8:0)
USB(15:0)
DIG_AUDIO(8:0)
RFCLK(1:0)
RFCONV(11:0)
EMINT(3:0)
PCM(3:0)
AUDIOCTRL(5:0)
KEYBOARD(24:0)
INT_MMC1(13:0)
TXC(2:0)
CBUS(3:0)
ACI(7:0)
INT_SIM(5:0)
I2C2(1:0)
D2800
RAP3GS2_V4.12_PA
N2490
B3,C3,D5,E3= GND
X2491
D3350
A2,D3=GND
D3000
COMBO 32Mx16 DDR
64Mx16 M3
N2492
N2002
17= GND
A11,A12,B12,B17,C17,C18,F2,G1,G2,H1,H2,J1,J2,R18,T18,U5,U17,V11,V12,V13,
YA4,YA8,YA18,YB11,YC1,YE11,YG8,YG9,YG11,YH2,YH8,YJ8,YJ13,YK7,YK12,YL11,
YL12,YM1,YM8,YM18,YN14,YP6,YU9,YU11,YU17,YV11,YV14,YH11,YA13=GND
A13,A14,A15,A16,B13,B14,B15,B16,E1,F1,R17,T17,V3,V4,V5,V6,YA7,YA14,YB1,
YB16,YF18,YH17,YK2,YK18,YL17,YL18,YT1,YV5,YV12,YV16=VIO
YA5,YB2,YB7,YB12,YB13,YB18,YF17,YK17,YL1,YL2,YM17,
YN18,YP1,YR17,YU13,YV7,YV8,YV17=VCORE

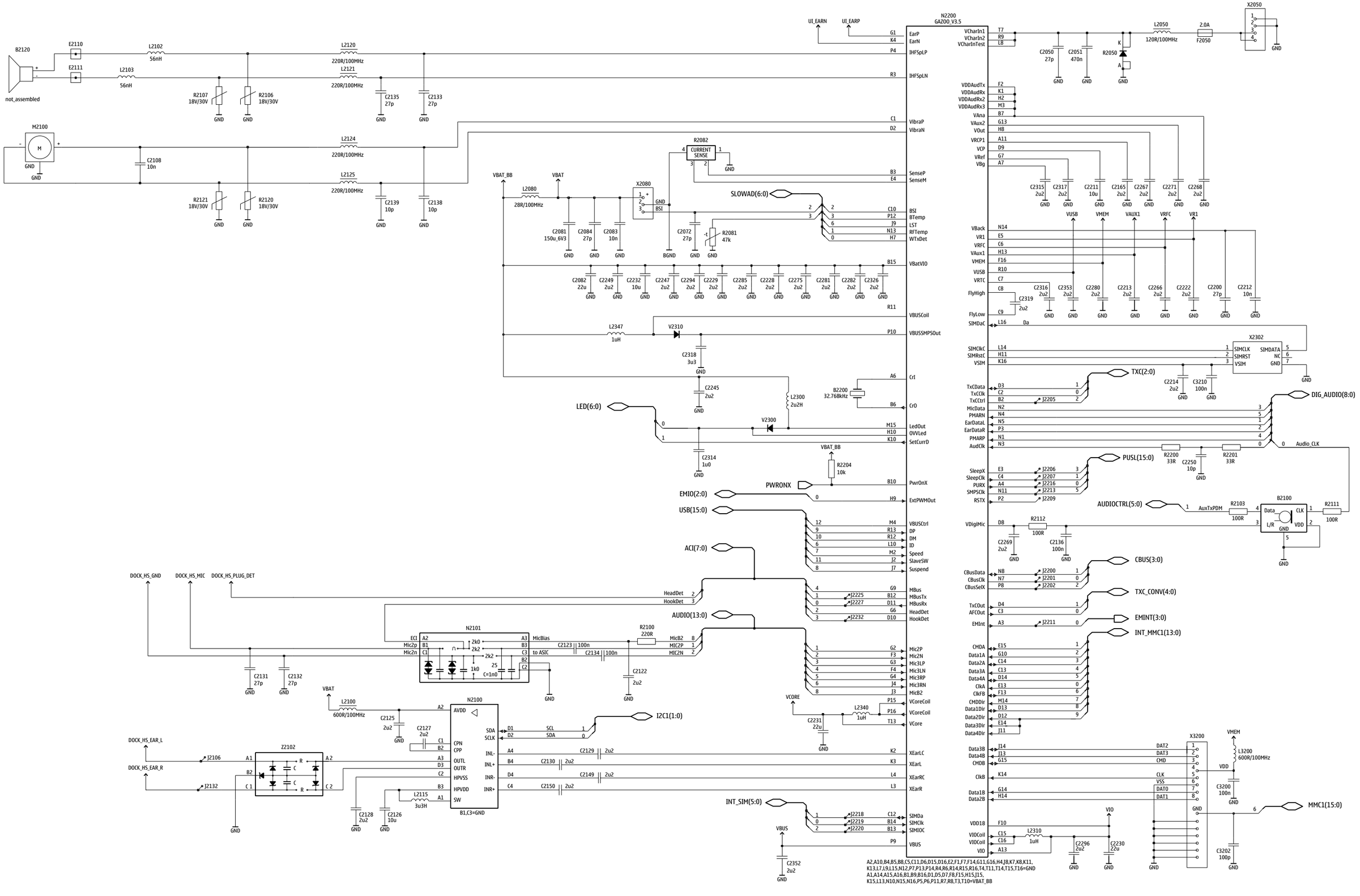
B2120
not_assembled
M2100
E2110
E2111
L2102
56nH
L2103
56nH
L2120
220R/100MHz
L2121
220R/100MHz
L2124
220R/100MHz
L2125
220R/100MHz
R2107 18V/30V
R2106 18V/30V
R2121 18V/30V
R2120 18V/30V
C2108 10n
C2135 27p
C2133 27p
C2139 10p
C2138 10p
GND
UI_EARN
UI_EARP
N2200 GAZOO_V3.5
EarP
EarN
IHFSpLP
IHFSpLN
VibraP
VibraN
SenseP
SenseM
BSI
BTemp
LST
RFTemp
WTxDet
VBatVIO
VBUSCoil
VBUSSMPSOut
CrI
CrO
LedOut
OVVLed
SetCurrD
PwrOnX
ExtPWMOut
VBUSCtrl
DP
DM
ID
Speed
SlaveSW
Suspend
MBus
MBusTx
MBusRx
HeadDet
HookDet
Mic2P
Mic2N
Mic3LP
Mic3LN
Mic3RP
Mic3RN
MicB2
VCoreCoil
VCoreCoil
VCore
XEarLC
XEarL
XEarRC
XEarR
SIMDa
SIMClk
SIMIOC
VBUS
R2082 CURRENT SENSE
R2081 47k
C2072 27p
C2081 150u_6V3
C2084 27p
C2083 10n
C2082 22u
C2249 2u2
C2232 10u
C2247 2u2
C2294 2u2
C2229 2u2
C2285 2u2
C2228 2u2
C2275 2u2
C2281 2u2
C2282 2u2
C2326 2u2
L2080 28R/100MHz
X2080
L2347 1uH
V2310
C2318 3u3
C2245 2u2
L2300 2u2H
V2300
B2200 32.768kHz
C2314 1u0
R2204 10k
SLOWAD(6:0)
LED(6:0)
EMIO(2:0)
USB(15:0)
ACI(7:0)
AUDIO(13:0)
INT_SIM(5:0)
VBAT_BB
VBAT
VCORE
L2340 1uH
C2231 22u
C2352 2u2
A2,A10,B4,B5,B8,C5,C11,D6,D15,D16,E2,F1,F7,F14,G11,G16,H4,J8,K7,K8,K11,
K13,L7,L9,L15,N12,P7,P13,P14,R4,R6,R14,R15,R16,T4,T11,T14,T15,T16=GND
A1,A14,A15,A16,B1,B9,B16,D1,D5,D7,F8,F15,H15,J15,
K15,L13,N10,N15,N16,P5,P6,P11,R7,R8,T3,T10=VBAT_BB
X2050
L2050 120R/100MHz
2.0A F2050
C2050 27p
C2051 470n
R2050
VCharIn1
VCharIn2
VCharInTest
VDDAudTx
VDDAudRx
VDDAudRx2
VDDAudRx3
VAna
VAux2
VOut
VRCP1
VCP
VRef
VBg
C2315 2u2
C2317 2u2
C2211 10u
C2165 2u2
C2267 2u2
C2271 2u2
C2268 2u2
VUSB
VMEM
VAUX1
VRFC
VR1
VBack
VR1
VRFC
VAux1
VMEM
VUSB
VRTC
FlyHigh
FlyLow
SIMDaC
C2316 2u2
C2353 2u2
C2280 2u2
C2213 2u2
C2266 2u2
C2222 2u2
C2200 27p
C2212 10n
C2319 2u2
X2302
SIMClkC
SIMRstC
VSIM
SIMCLK
SIMRST
SIMDATA
NC
TxCData
TxCClk
TxCCtrl
MicData
PMARN
EarDataL
EarDataR
PMARP
AudClk
TXC(2:0)
J2205
C2214 2u2
C3210 100n
DIG_AUDIO(8:0)
R2200 33R
C2250 10p
R2201 33R
Audio_CLK
PUSL(15:0)
SleepX
SleepClk
PURX
SMPSClk
RSTX
AUDIOCTRL(5:0)
B2100
AuxTxPDM
Data
CLK
L/R
VDD
R2103 100R
R2111 100R
VDigiMic
R2112 100R
C2269 2u2
C2136 100n
CBUS(3:0)
CBusData
CBusClk
CBusSelX
TXC_CONV(4:0)
TxCOut
AFCOut
EMINT(3:0)
EMInt
INT_MMC1(13:0)
CMDA
Data1A
Data2A
Data3A
Data4A
ClkA
ClkFB
CMDDir
Data1Dir
Data2Dir
Data3Dir
Data4Dir
X3200
L3200 600R/100MHz
C3200 100n
C3202 100p
MMC1(15:0)
DAT2
DAT3
CMD
CLK
VSS
DAT0
DAT1
Data3B
Data4B
CMDB
ClkB
Data1B
Data2B
VIO
VDD18
VIOCoil
VIOCoil
L2310 1uH
C2296 2u2
C2230 22u
DOCK_HS_GND
DOCK_HS_MIC
DOCK_HS_PLUG_DET
HeadDet
HookDet
N2101
ECI
Mic2p
Mic2n
MicBias
to ASIC
C2123 100n
C2134 100n
C2122 2u2
C2131 27p
C2132 27p
R2100 220R
MicB2
MIC2P
MIC2N
VBAT
L2100 600R/100MHz
C2125 2u2
C2127 2u2
N2100
AVDD
CPN
CPP
OUTL
OUTR
HPVSS
HPVDD
SW
SDA
SCLK
INL-
INL+
INR-
INR+
B1,C3=GND
I2C1(1:0)
C2129 2u2
C2130 2u2
C2149 2u2
C2150 2u2
L2115 3u3H
C2128 2u2
C2126 10u
DOCK_HS_EAR_L
DOCK_HS_EAR_R
Z2102
J2106
J2132

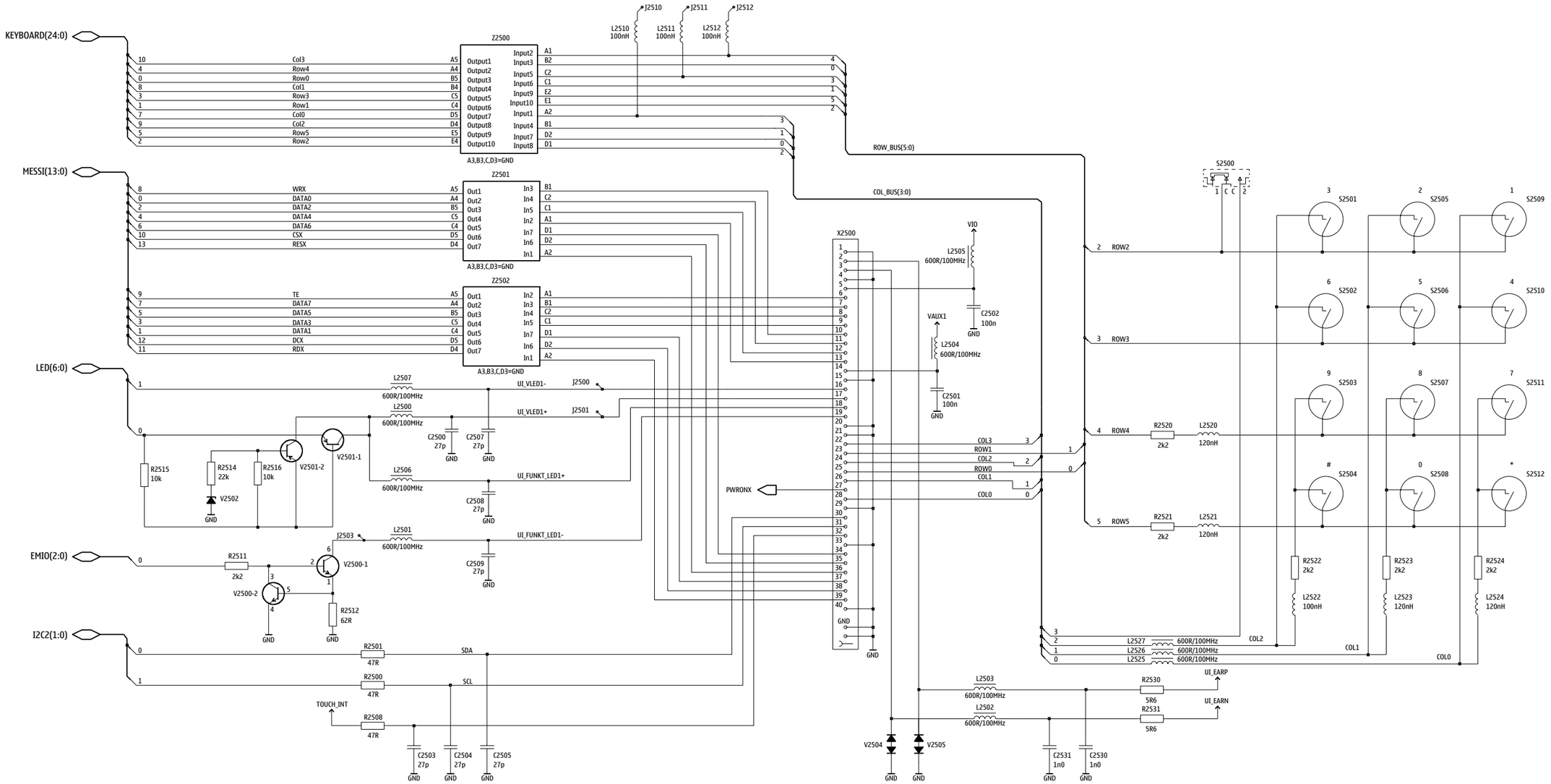

Confidential Copyright © 2010 NOKIA Only for training and service purposes

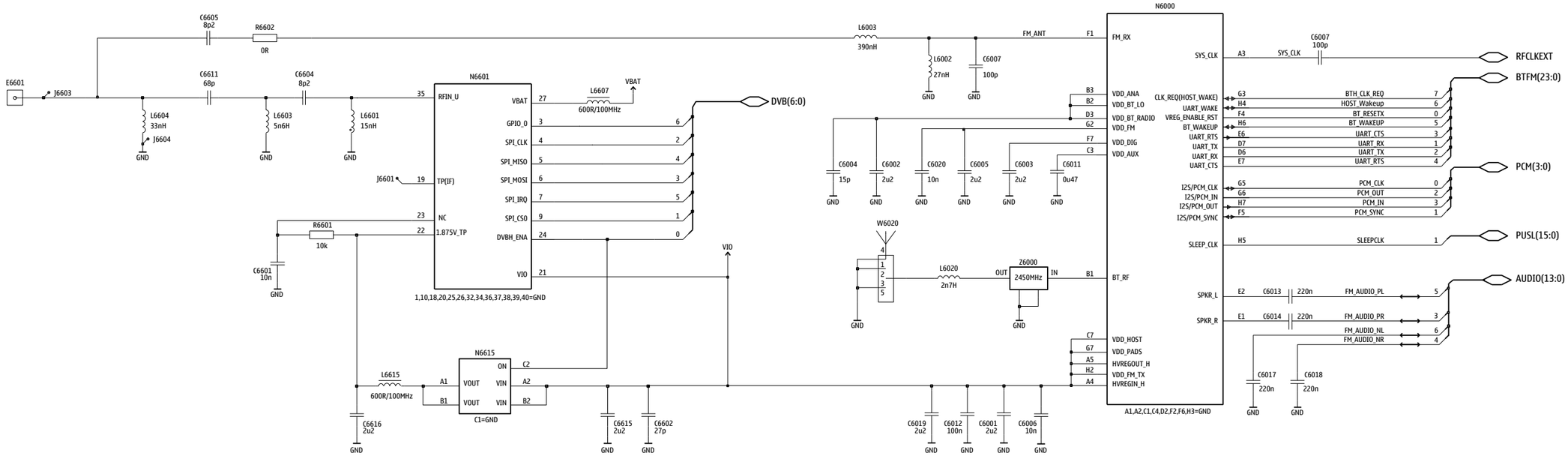
E6601
J6603
C6605 8p2
R6602 0R
C6611 68p
C6604 8p2
L6604 33nH
J6604
L6603 5n6H
L6601 15nH
GND
N6601
RFIN_U 35
VBAT 27
L6607 600R/100MHz
VBAT
GPIO_0 3
SPI_CLK 4
SPI_MISO 5
SPI_MOSI 6
SPI_IRQ 7
SPI_CS0 9
DVBH_ENA 24
VIO 21
DVB(6:0)
J6601 19 TP(IF)
23 NC
22 1.875V_TP
R6601 10k
C6601 10n
1,10,18,20,25,26,32,34,36,37,38,39,40=GND
VIO
N6615
ON C2
VOUT VIN A1 A2
VOUT VIN B1 B2
C1=GND
L6615 600R/100MHz
C6616 2u2
C6615 2u2
C6602 27p
L6003 390nH
L6002 27nH
C6007 100p
FM_ANT F1
B3 B2 D3 G2 F7 C3
C6004 15p
C6002 2u2
C6020 10n
C6005 2u2
C6003 2u2
C6011 0u47
W6020
L6020 2n7H
Z6000 2450MHz OUT IN
B1 BT_RF
C7 G7 A5 H2 A4
C6019 2u2
C6012 100n
C6001 2u2
C6006 10n
N6000
FM_RX
VDD_ANA VDD_BT_LO VDD_BT_RADIO VDD_FM VDD_DIG VDD_AUX
VDD_HOST VDD_PADS HVREGOUT_H VDD_FM_TX HVREGIN_H
A1,A2,C1,C4,D2,F2,F6,H3=GND
SYS_CLK A3
C6007 100p
RFCLKEXT
CLK_REQ(HOST_WAKE) G3 BTH_CLK_REQ 7
UART_WAKE H4 HOST_Wakeup 6
VREG_ENABLE_BST F4 BT_RESETX 0
BT_WAKEUP H6 BT_WAKEUP 5
UART_RTS E6 UART_CTS 3
UART_TX D7 UART_RX 1
UART_RX D6 UART_TX 2
UART_CTS E7 UART_RTS 4
BTFM(23:0)
I2S/PCM_CLK G5 PCM_CLK 0
I2S/PCM_IN G6 PCM_OUT 2
I2S/PCM_OUT H7 PCM_IN 3
I2S/PCM_SYNC F5 PCM_SYNC 1
PCM(3:0)
SLEEP_CLK H5 SLEEPCLK 1
PUSL(15:0)
SPKR_L E2 C6013 220n FM_AUDIO_PL 5
SPKR_R E1 C6014 220n FM_AUDIO_PR 3
FM_AUDIO_NL 6
FM_AUDIO_NR 4
AUDIO(13:0)
C6017 220n
C6018 220n

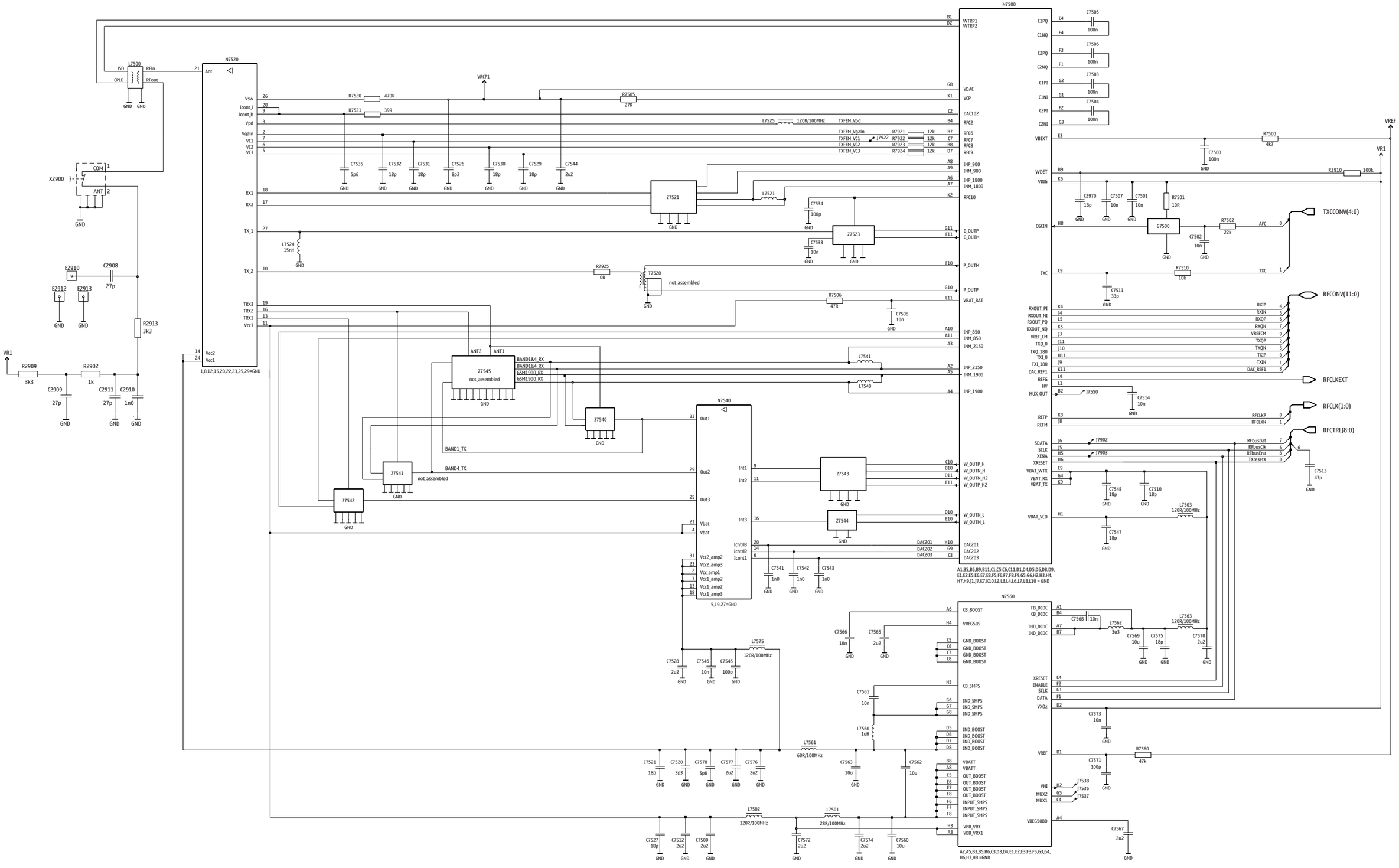

Confidential Copyright © 2010 NOKIA Only for training and service purposes

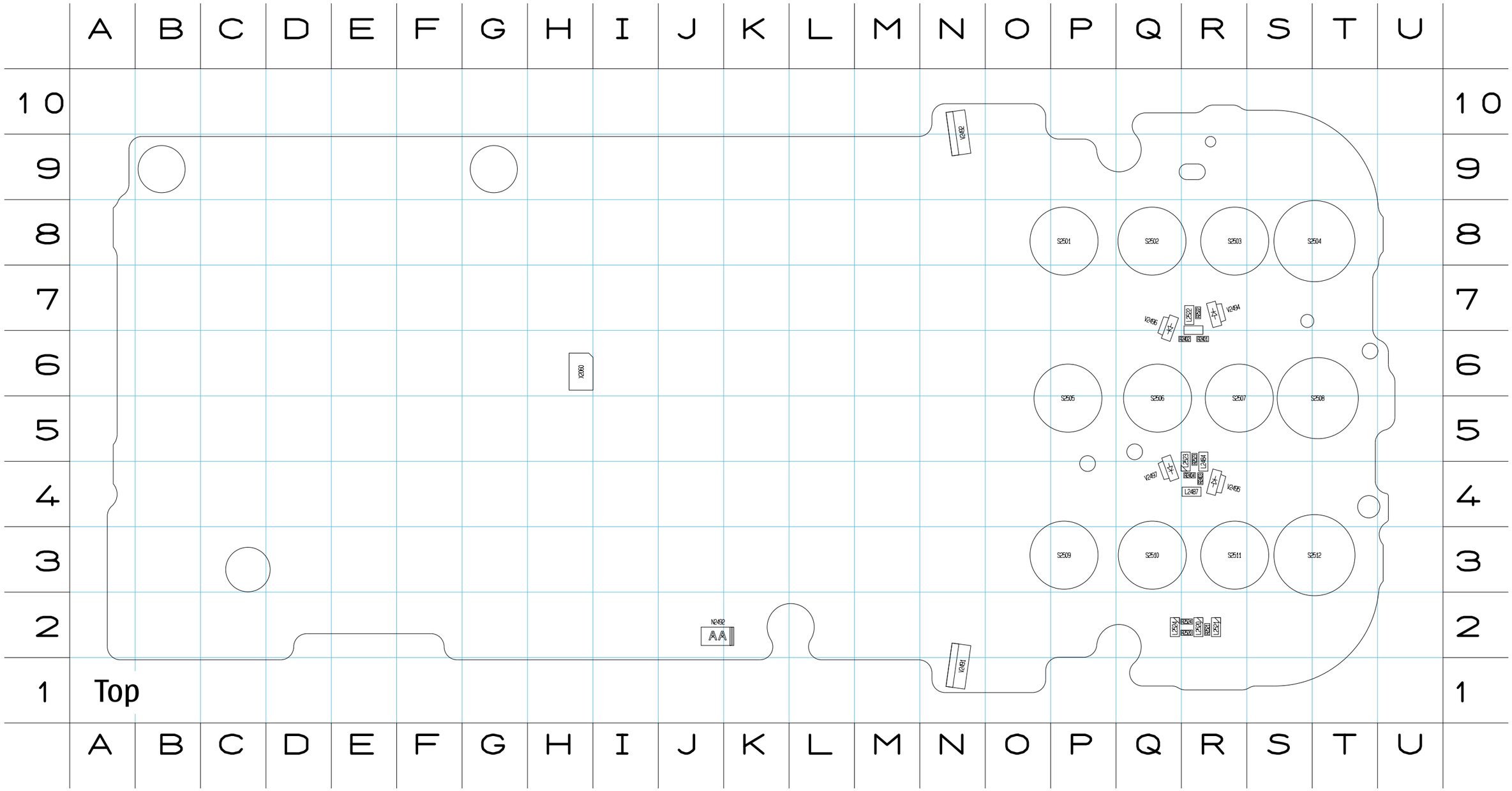

L		N		R2521	R2	V2495	R4
L2484	R4	N2492	J2	R2522	R7	V2496	Q7
L2487	R4	R		R2523	R5	V2497	Q4
L2520	R2	R2401	R6	R2524	R2	X	
L2521	R2	R2402	R6	V		X2060	H6
L2522	R7	R2403	R4	V2491	N1		
L2523	R4	R2404	R4	V2492	N10		
L2524	Q2	R2520	R2	V2494	R7		

Confidential Copyright © 2010 NOKIA Only for training and service purposes

A		C2081	P5	C2130	J6	C2214	K8	C2271	K8	C2352	J7	C2507	F3	C2812	L5	C2910	Q8	C6006	C6
A2100	B2	C2082	L8	C2131	J6	C2222	K6	C2275	J7	C2353	J7	C2508	E3	C2813	M4	C2911	Q7	C6007	B6
A2800	K5	C2083	P2	C2132	J6	C2228	L7	C2280	L8	C2365	K6	C2509	D3	C2814	M4	C2970	M2	C6008	B5
A6000	C6	C2084	K9	C2133	P7	C2229	K8	C2281	J7	C2481	L9	C2530	F3	C2816	L3	C3200	J2	C6009	C5
A7500	N5	C2085	Q6	C2134	J6	C2230	M8	C2282	K8	C2482	L9	C2531	F3	C2817	J3	C3201	F9	C6010	B5
B		C2086	P2	C2135	P7	C2231	J8	C2285	L6	C2490	K9	C2800	J4	C2818	L3	C3202	J5	C6011	C5
B2120	R4	C2087	P3	C2136	Q8	C2232	J6	C2294	K6	C2492	K9	C2801	K5	C2819	K5	C3350	C5	C6012	B6
B2200	L6	C2108	Q8	C2138	P8	C2245	K8	C2296	L7	C2496	K9	C2804	L5	C2820	M5	C3351	D5	C6013	B5
C		C2122	K6	C2139	P8	C2247	L7	C2314	L8	C2497	J2	C2805	K3	C2821	L3	C3352	D6	C6014	B5
C2001	K2	C2123	J6	C2149	J7	C2249	J6	C2315	L7	C2500	F3	C2806	M3	C2823	M4	C3353	C6	C6017	B6
C2002	J3	C2125	B2	C2150	J7	C2250	K6	C2316	M7	C2501	D3	C2807	M4	C2824	M4	C6001	B5	C6018	B6
C2003	B4	C2126	B2	C2165	L7	C2266	L7	C2317	M7	C2502	F3	C2808	J3	C2828	K5	C6002	B5	C6019	C5
C2050	B4	C2127	B2	C2211	L7	C2267	K6	C2318	K8	C2503	E3	C2809	M4	C2829	M4	C6003	C5	C6020	C6
C2051	B4	C2128	B2	C2212	K8	C2268	L7	C2319	M7	C2504	E3	C2810	J5	C2908	Q7	C6004	B5	C6021	D8
C2072	P4	C2129	J6	C2213	K8	C2269	L7	C2326	L8	C2505	E3	C2811	L5	C2909	P8	C6005	B6	C6022	D9

C6023	C9	C7504	O3	C7528	O5	C7546	O4	C7573	O8	E2910	S7	L2100	C2	L2500	F4	L3350	C6	L7522	O3
C6026	C8	C7505	O3	C7529	M6	C7547	O2	C7574	O9	E2912	S7	L2102	R2	L2501	E3	L3351	D5	L7524	M3
C6601	B8	C7506	O3	C7530	M6	C7548	N2	C7575	P4	E2913	S8	L2103	R2	L2502	F3	L6002	B6	L7525	O4
C6602	B8	C7507	O2	C7531	M7	C7560	M8	C7576	M7	E3201	E8	L2115	B2	L2503	F3	L6003	B6	L7526	O7
C6603	C8	C7508	N2	C7532	M6	C7561	N9	C7577	M7	E3202	G8	L2120	P6	L2504	D3	L6020	C8	L7540	N6
C6604	C7	C7509	O7	C7533	M6	C7562	N8	C7578	M7	E3203	E5	L2121	P6	L2505	F3	L6601	C7	L7541	P6
C6605	D8	C7510	N3	C7534	N3	C7563	N8	**D**		E6601	D6	L2124	P8	L2506	E3	L6603	C8	L7542	N6
C6610	C8	C7511	M3	C7535	O4	C7565	N8	D2800	K4	**F**		L2125	P8	L2507	F4	L6604	D7	L7560	N9
C6611	D8	C7512	O5	C7536	M4	C7566	O8	D3000	K4	F2001	B4	L2300	L8	L2510	F9	L6607	C8	L7561	M8
C6615	L9	C7513	K3	C7537	N3	C7567	O8	D3350	C5	F2050	A4	L2310	L8	L2511	F9	L6615	M9	L7562	P9
C6616	B8	C7514	O2	C7541	M4	C7568	O9	**E**		**G**		L2340	J8	L2512	F9	L7500	O6	L7563	O3
C7500	O3	C7520	O7	C7542	N4	C7569	O8	E2110	S3	G7500	N2	L2347	K8	L2525	O1	L7501	M9	L7575	M5
C7501	M2	C7521	O6	C7543	O4	C7570	O2	E2111	Q3	**L**		L2482	L9	L2526	O1	L7502	O7	**M**	
C7502	M2	C7526	M5	C7544	O2	C7571	O8	E2112	Q5	L2050	B4	L2483	L9	L2527	F9	L7503	O2	M2100	R8
C7503	O3	C7527	O8	C7545	M5	C7572	N9	E2113	S5	L2080	K8	L2491	K9	L3200	J2	L7521	O3	**N**	

N2002	J2	R2025	J2	R2204	L6	R2803	K3	R2902	P8	R7506	M5	V2300	L8	X3200	H3	Z7543	N4
N2100	B2	R2027	J2	R2400	L9	R2804	K3	R2909	P8	R7510	M3	V2310	J8	X3202	F7	Z7544	N4
N2101	J6	R2050	B4	R2490	K2	R2880	J5	R2910	M2	R7520	M7	V2500	K9	**Z**		Z7545	O6
N2200	K7	R2081	J7	R2500	E3	R2881	K5	R2913	Q7	R7521	O3	V2501	F4	Z2102	C2		
N2490	L9	R2082	P5	R2501	E3	R2882	K5	R3351	D5	R7560	N8	V2502	F4	Z2400	D3		
N6000	B5	R2100	K6	R2508	E3	R2883	J5	R6601	B8	R7921	N4	V2504	F2	Z2401	D4		
N6601	B7	R2103	P8	R2511	K9	R2884	J5	R6602	D8	R7922	N4	V2505	F2	Z2500	E4		
N6615	M9	R2106	P6	R2512	K9	R2885	J5	R6603	D7	R7923	N4	**W**		Z2501	E4		
N7500	O3	R2107	P6	R2514	F4	R2886	J5	R6604	J4	R7924	N4	W6020	C9	Z2502	E4		
N7520	N7	R2111	P8	R2515	F4	R2887	K5	R6615	L9	R7925	N4	**X**		Z6000	B5		
N7540	N5	R2112	P8	R2516	F4	R2888	K5	R7500	O3	**S**		X2050	B3	Z7521	O4		
N7560	O8	R2120	Q8	R2530	F4	R2890	J4	R7501	M2	S2500	I9	X2080	P3	Z7523	N3		
R		R2121	Q8	R2531	F4	R2891	J4	R7502	M2	**T**		X2491	C4	Z7540	N6		
R2023	J2	R2200	K6	R2801	J5	R2892	J5	R7504	O4	T7520	N4	X2500	E3	Z7541	O6		
R2024	B4	R2201	K6	R2802	J4	R2893	J5	R7505	O2	**V**		X2900	P7	Z7542	N6		

Confidential Copyright © 2010 NOKIA Only for training and service purposes